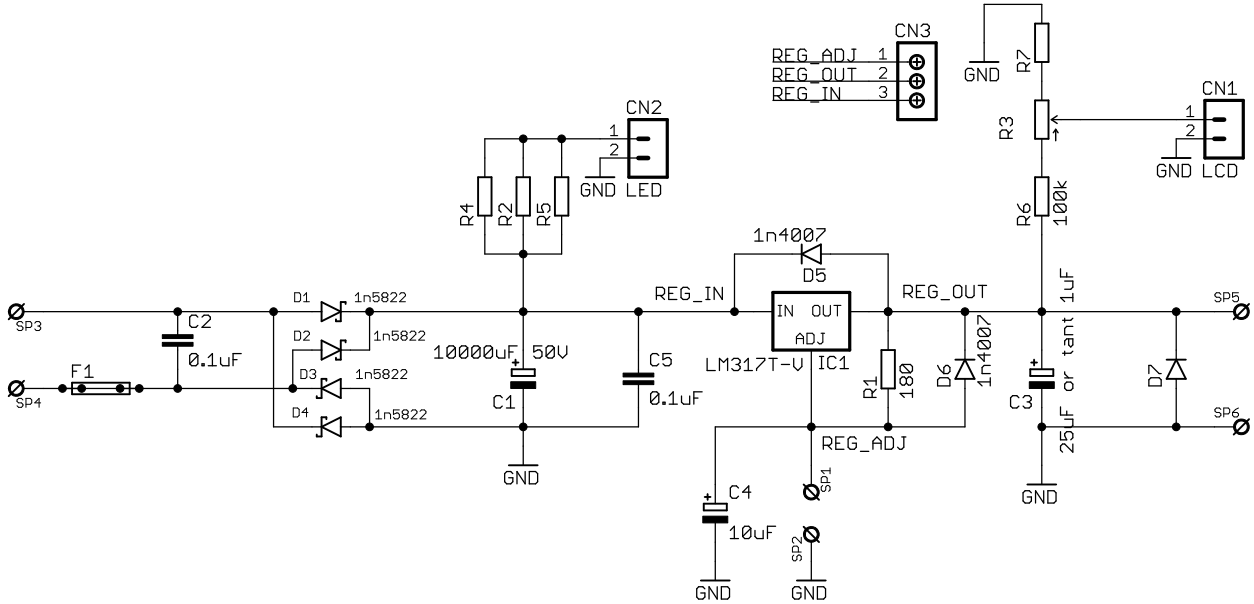

H1
MOUNT-PAD-ROUND3.0

H2
MOUNT-PAD-ROUND3.0

H3
MOUNT-PAD-ROUND3.0

H4
MOUNT-PAD-ROUND3.0

LM317 Adjustable Power Supply www.JumperOne.com	
TITLE: main_board	
Document Number:	REV: 2
Date: 8/14/2011 2:23:19 PM	Sheet: 1/1