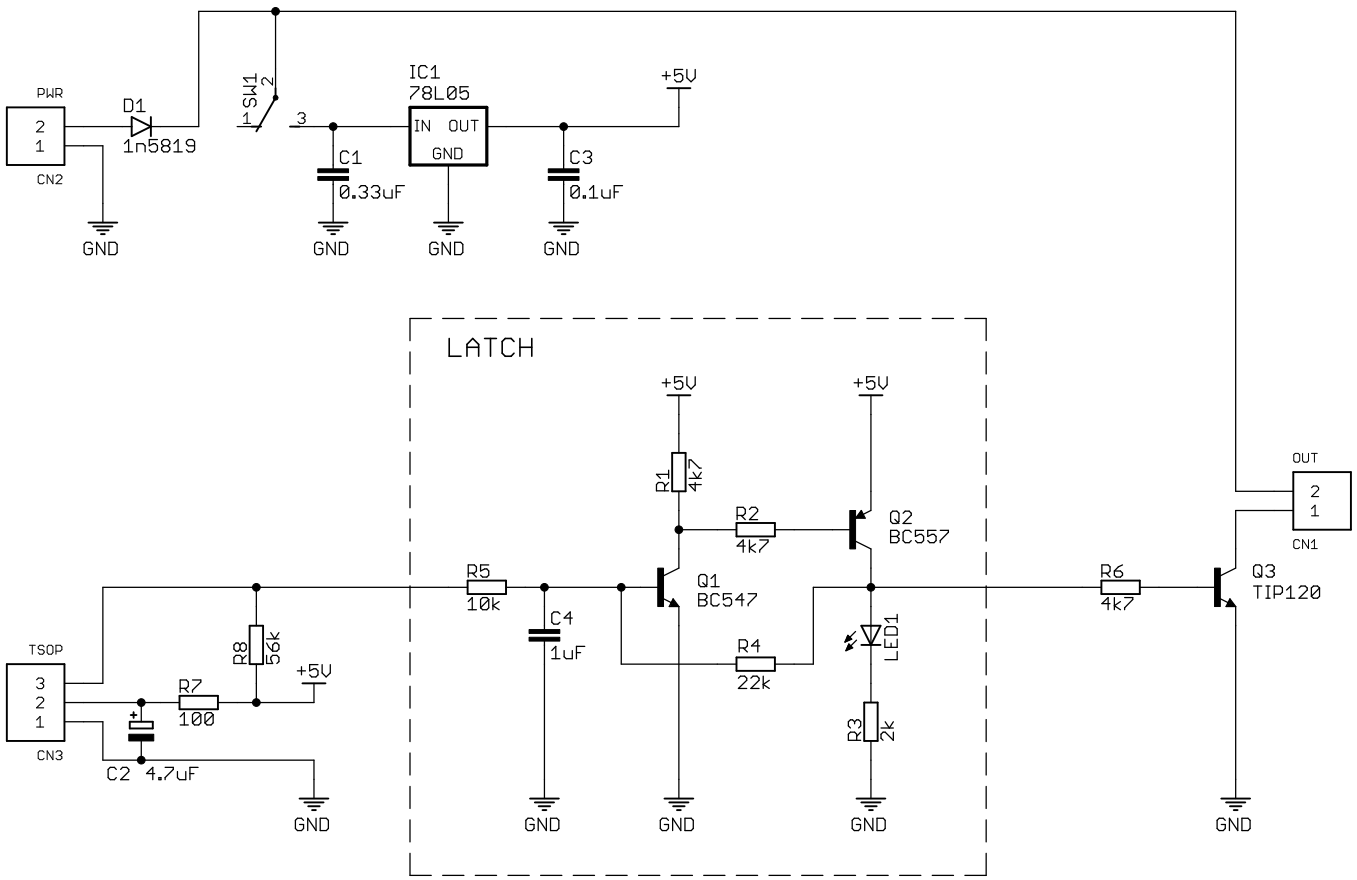

by Phil Levchenko

www.JumperOne.com

TITLE: Reciever

Document Number:

REV: 1

Date: 11/6/2011 3:52:29 PM

Sheet: 1/1